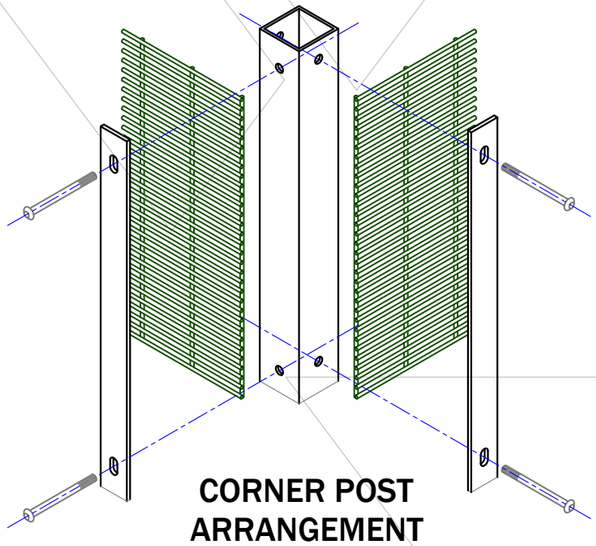

CORNER POST
ARRANGEMENT

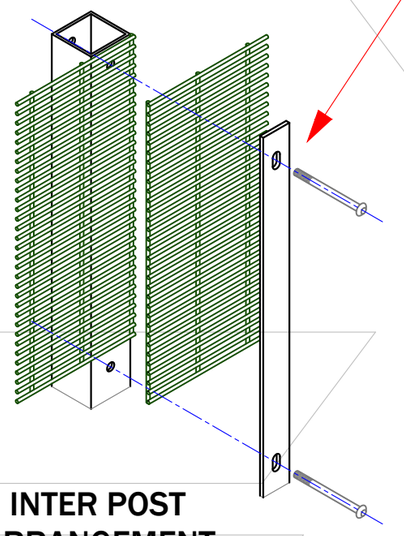

INTER POST
ARRANGEMENT

clamp bar,
M8 through bolt
& shear cone nut

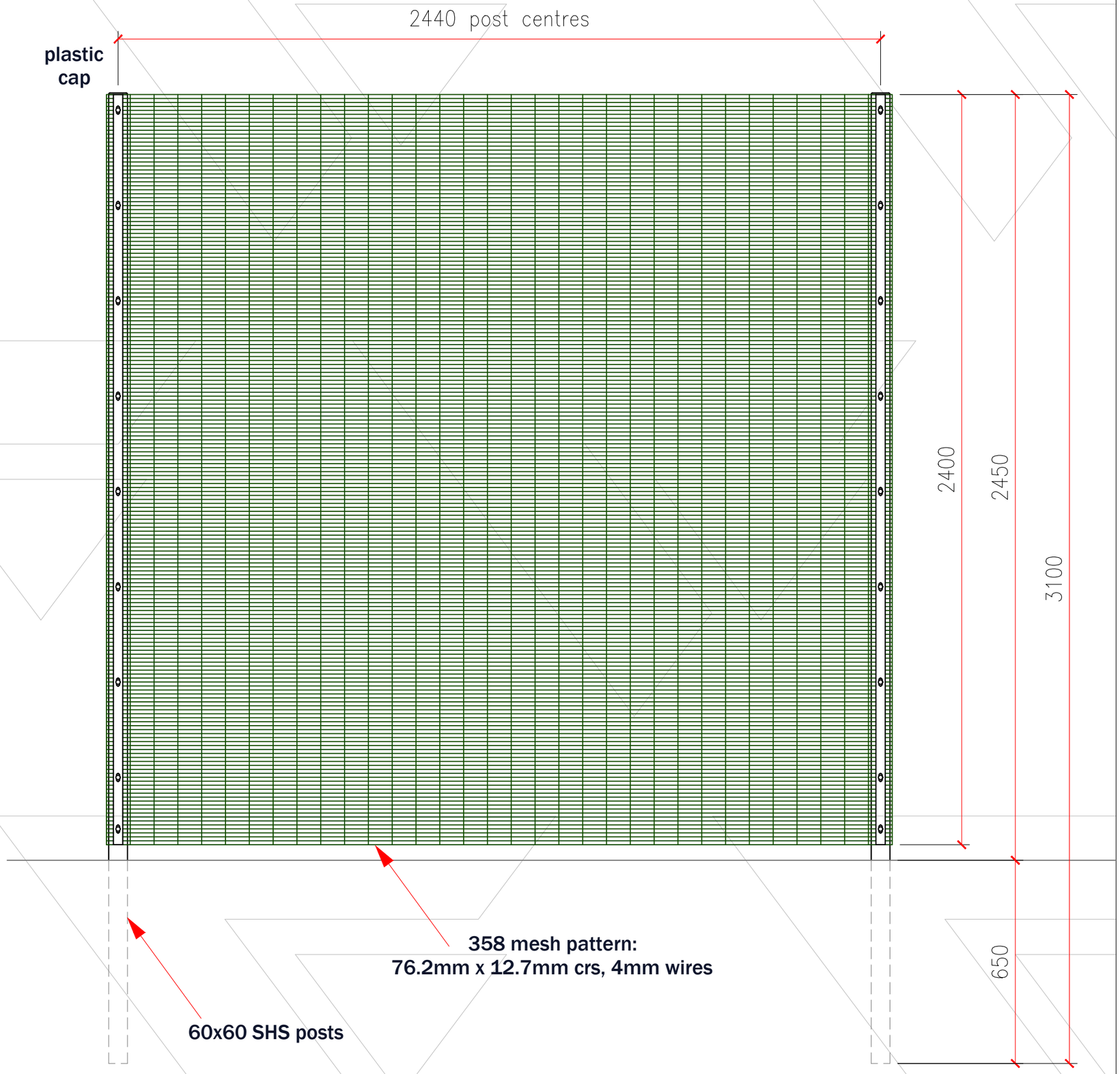

CLA FABRICATIONS LTD
Tel: 0121 272 1777
email: sales@ clafabrications.co.uk
web: www.clafabrications.co.uk

C-358 panel arrangement, 2.4m nom. high
clamp bar & through bolt fix

C-358/24/cbt